| Leone 600 | LE60 |

LE60EC - Leone White with Ceramic Square Bowl Top- Pictured

Leone Vanities Available in White or Walnut Cabinets.

White

Walnut

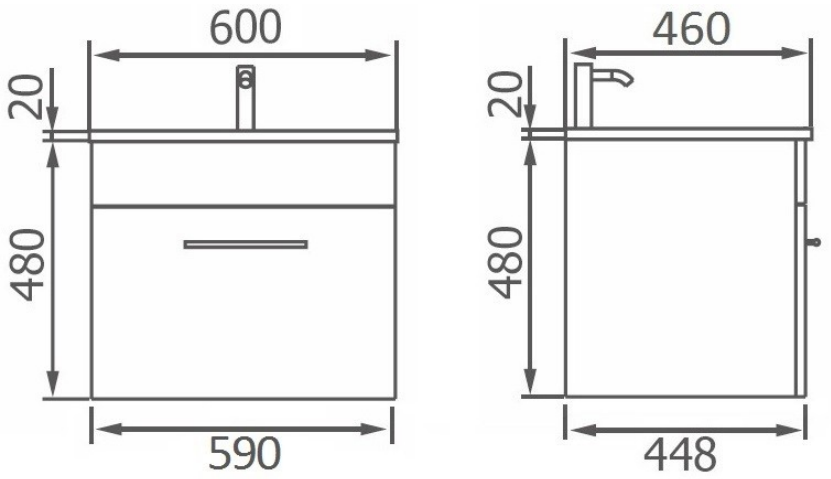

Standard Polymarble, Ceramic or Under Mount Stone Top Spec

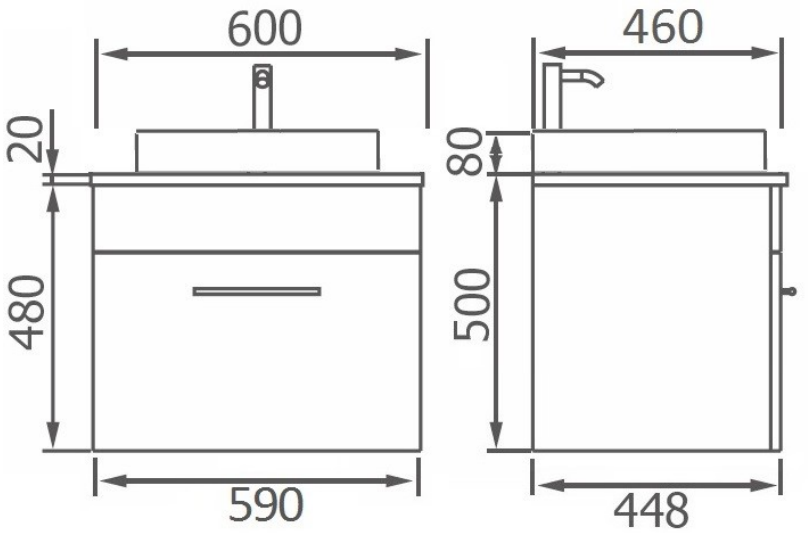

Standard Above Counter Stone Top Spec

Specifications are shown in millimetres.

Please Note: Specifications and product sizes can be varied by the manufacturer without notice. The above information is indicative only.