ARTO®

White

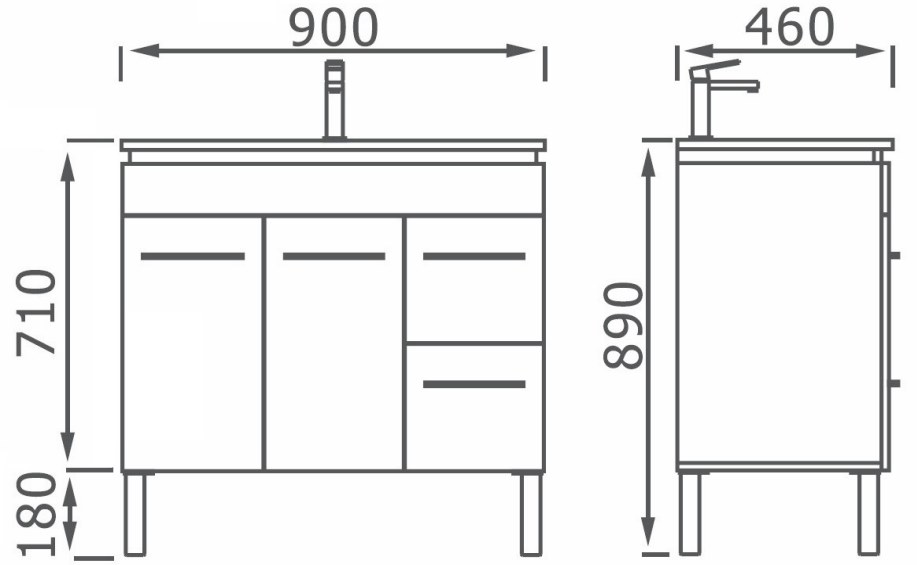


## JAZZ 900 VANITY JZ90

- **FINISH:** White
- **SUITABLE TOPS:** Ceramic, Rock & Stone Top
- Vanity - 890mm High Kick or Legs (with Ceramic Top), also Wall Hangable (16mm Solid Back)
- Vanity with Ceramic Top pictured - JZ90EC
- Hardware: Standard Drawer Runners & Hinges

**WARRANTY:**

- 5 Year replacement product and parts
- 1 Year replacement parts and labour

**It is highly recommended an application of sealant at the base of the mixer to ensure a water tight seal.**